Acute®

PC-based T&M Instruments

Acute LVDS Probe

LVDS Probe

Introduction：LVDS probe only supports LA4000 series or BusFinder series. It is for digital signals and low-voltage differential signals measurement.

The LVDS Probe includes 2 parts:

a. LA08/09 tip：There are 2 LA09-tips and 1 LA08-tip for single-ended LA inputs.

b. LVDS tip：There is 1 LVDS-tip which includes 2 pairs of differential signal inputs.

Specifications：

- Threshold：NA (LVDS P/N reference)
- Input Voltage：Max=0~3.3V
- Sensitivity=100mV
- Impedance：75kohm || 3pF
- Data rate：500Mbps (Same as LA-probe)

Appearance：

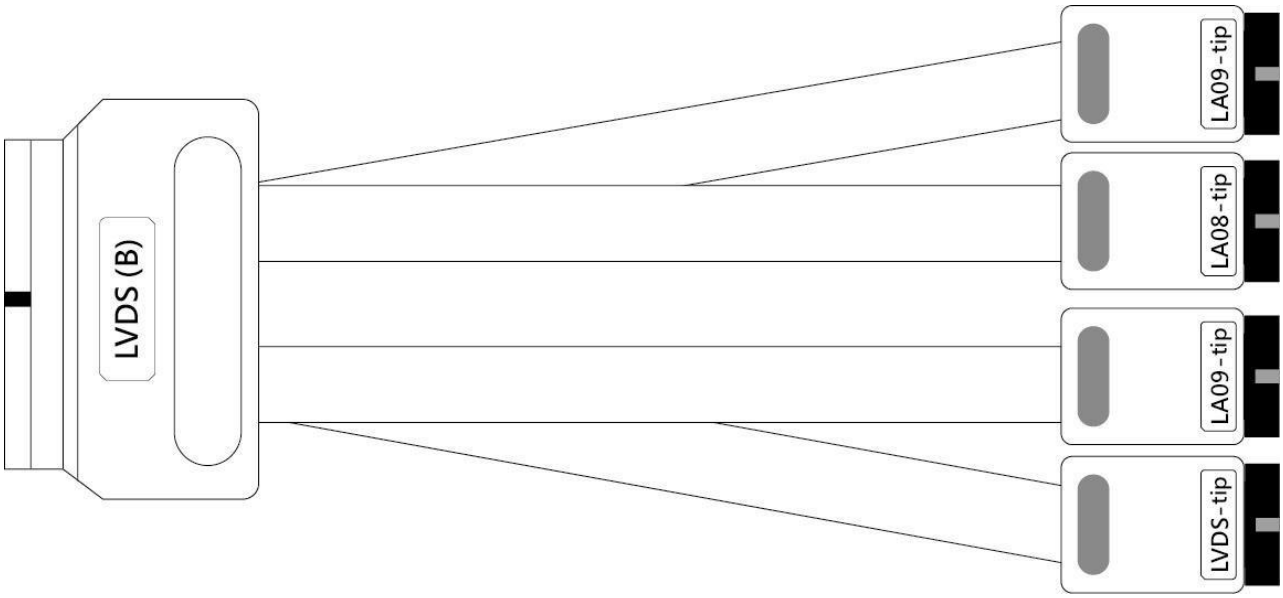

 Copyright©2020

Pin Define：

Tip size：

20-pin Logic Analyzers: Probe tip = Pin Socket，Pitch=2.54，Unit : mm.

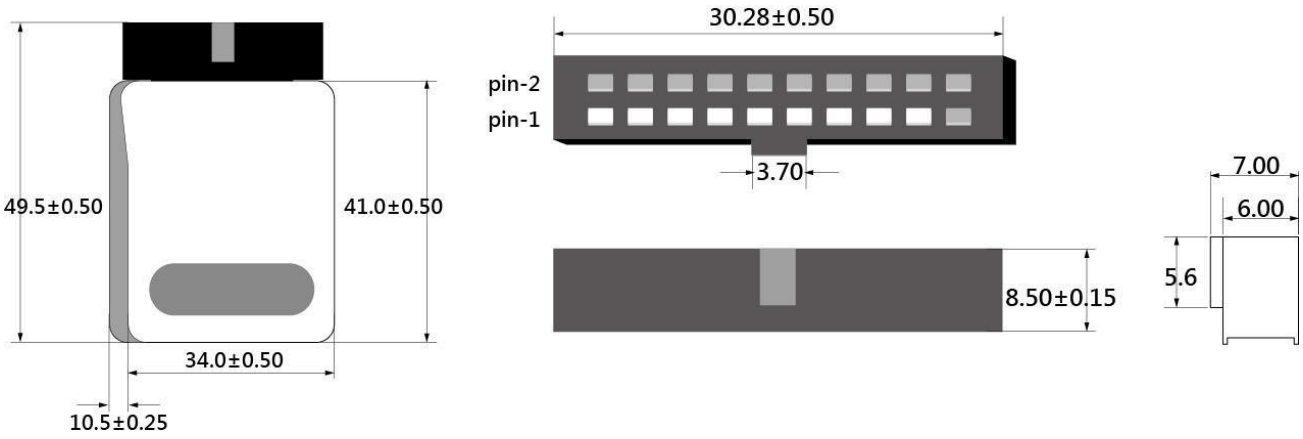

LVDS Tip pins：

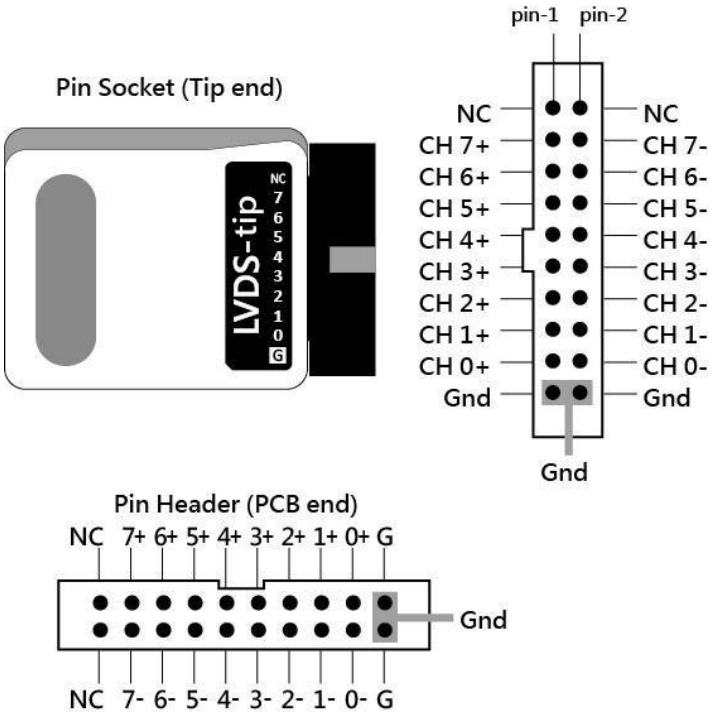

 Copyright©2020

LA Tip pins：

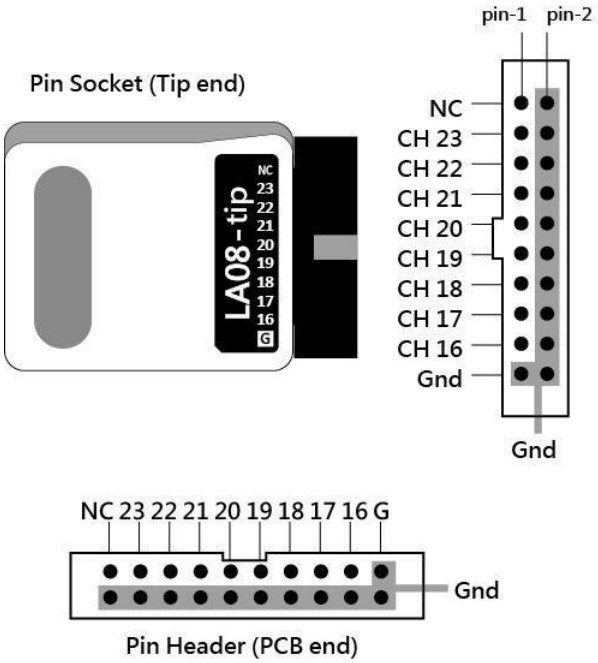

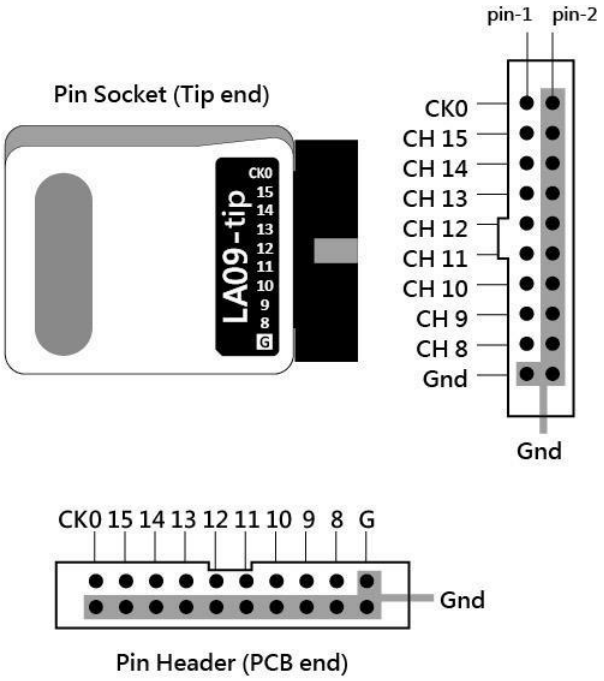

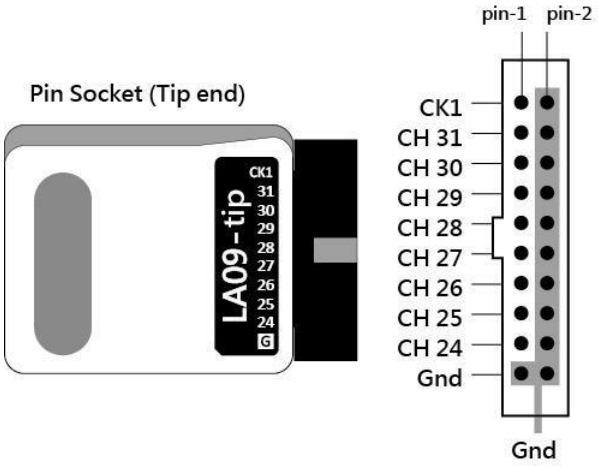

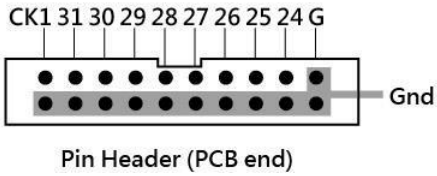

 Copyright©2020